SUPPLY NETWORK ANALYZER

CVM-96 SERIES

(V. 6.12 and upper)

INSTRUCTION MANUAL

(M 981 304 / 02C - GB)

(c) **CIRCUTOR S.A.**

CONTENTS **page**

1.- DELIVERY SPOT CHECK 2
2.- MAIN FEATURES 3
3.- INSTALLATION AND START-UP 5
3.1.- Installation. 5
3.2.- CVM-96 (RS-485) Connection terninal (see lable on the rear part) 7
3.3.- CVM-96 (RS-232) Connection terninal (see lable on the rear part) 8
3.4.- Connection drawing for the CVM-96 : 9
4.- OPERATION MODE 13
5.- SETUP PROCEDURE 15
5.1.- Phase-to-Phase or Phase-to-Neutral voltages 16
5.2.- Voltage display mode 16
5.3.- Voltage transformation ratio 17
5.3.1.- Voltage Transformer Primary 17
5.3.2.- Voltage Transformer Secondary 18
5.4.- Current Transformer Primary 18
5.5.- Setting power demand utility screens. 19
5.6.- Initial screen setting 20
5.7.- Setting of the display shutdown time 20
5.8.- Clearing energy counters 21
5.9.- THD or D setting 22
5.10.- Additional screens when RELAY OUTPUTS (2 relays) are equipped 23
6.- SPECIFICATIONS 30
7.- SAFETY CONSIDERATIONS 32
8.- MAINTENANCE 32
9.- TECHNICAL SERVICE 32
10.- CVM-96 COMMUNICATIONS 33
10.1.- ! To take into account: 33
10.2.- RS-485 TYPE CONNECTION TO A RS-232 TYPE INPUT OF A PC 34
10.3.- RS-232 TYPE CONNECTION TO A RS-232 TYPE INPUT OF A PC 35
10.4.- MODBUS © protocol 36
11.- APPENDIX A: Second SETUP of the CVM-96 42

1.- DELIVERY SPOT CHECK

This manual is issued to help all the CVM-96 users to install and use it in order get the best from it. After receiving the unit, please check the following points:

(a) Does this device correspond to your order specifications?
(b) Check if any damage was done during the shipment process.
(c) Verify that it includes the correct instruction manual.

⚠ The manual you hold in your hands contains information and warnings about the **CVM-96** that the user should respect in order to guarantee a proper operation of all the instrument functions and keep its safety conditions.

⚠ Before powering the instrument for the first time, verify following points:

(a) **Power supply: <u>see rear part of your CVM-96</u>**

- ❑ **Standard**: **230 V a.c.** Single-phase, Frequency: 50 ... 60 Hz
- ❑ **SDC Model : 24 .... 120 V c.c.**
- ❑ Other supply voltages, on request.

(b) Maximum measuring voltage:

- ❑ **Standard**: **300 V a.c. phase-neutral / 520 V a.c. between phases**
- ❑ Other models: on request

CVM-96 – measuring 110V: 110 V a.c. phase-to-neutral / 190 V a.c. phase-to-phase
CVM-96 – measuring 500V: 500 V a.c. phase-to-neutral / 866 V a.c. phase-to-phase

(c) Maximum measurable current: Current transformer of In / 5 A a.c.

2.- MAIN FEATURES

The CVM-96 power meter is a programmable measuring instrument, offering several operation possibilities selectable in its SETUP option. Before power supplying the instrument, read the **CONNECTIONS and SETUP** sections and choose the most suitable operation mode for getting your desired data.

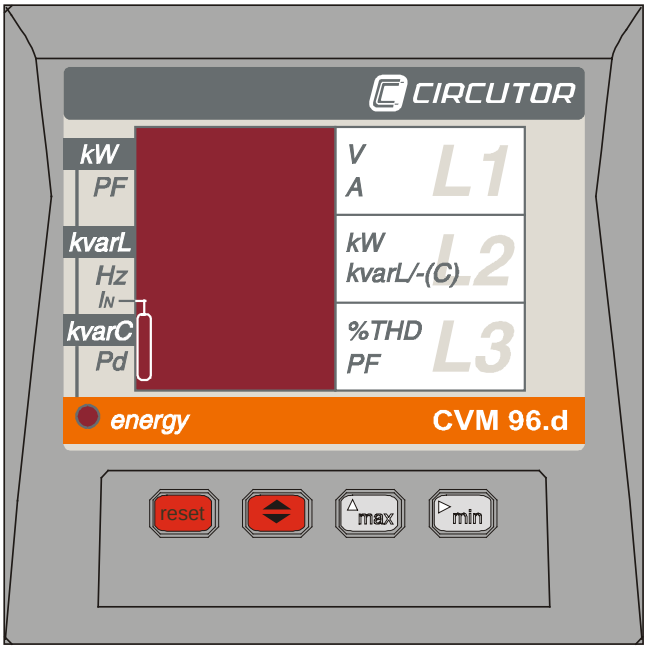

The CVM-96 is an instrument which measures, calculates and displays all the main electrical parameters at any electrical network (balanced or not). The measuring is true RMS value, through three a.c. voltage inputs and three a.c. current inputs (from Current Transformers .../ 5A).

By means of an internal microprocessor it simultaneously measures:

Parameter	Symbol	L1	L2	L3	Average
Voltage (phase-neutral)	*V*	x	x	x	
Voltage (phase-phase)	*V*	x	x	x	
Current	*A*	x	x	x	xx
Frequency	*Hz*	x			
Active power	*kW*	x	x	x	x
Reactive power L	*kvarL*	x	x	x	x
Reactive power C	*kvarC*	x	x	x	x
Apparent power					xx
Power factor	*PF*	x	x	x	x
Cos					xx
Power demand	*Pd*	x			
kW h	*energy*				x
kvarhL	*energy*				x
kvarhC	*energy*				x
Neutral current	I_N	x			
Voltage THD	*% THD- V*	x	x	x	
Current THD	*% THD- A*	x	x	x	
Individual harmonic current content (Up to the 15th)		xx	xx	xx	

Available: **x:** Display and communications **xx:** Communications

The CVM-96 delivers the visualization of above listed parameters by means of three 4-digit, led type, displays. Up to 3 parameters can be simultaneously read in the screen.

OTHER FEATURES

- Low-size (96 x 96 mm), panel-mounting analyzer.
- True R.M.S. measuring system.
- Instantaneous, maximum and minimum values of each measured parameter.
- Energy measurement (indication through a lighting led)
- RS-485 or RS-232 type communication to a PC (optional)
- Neutral current calculation.

3.- INSTALLATION AND START-UP

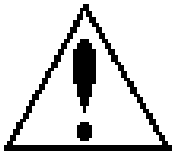

The manual you hold in your hands contains information and warnings that the user should respect in order to guarantee a proper operation of all the instrument functions and keep its safety conditions. The instrument must not be powered and used until its definitive assembly on the cabinet's door.

Whether the instrument is not used as manufacturer's specifications, the protection of the instrument can be damaged.

When any protection failure is suspected to exist (for example, it presents external visible damages), the instrument must be immediately powered off. In this case contact a qualified service representative.

3.1.- Installation.

Before powering the instrument for the first time, verify following points:

a.- **Power supply: <u>see rear part of your CVM-96</u>**

- ❑ ***Standard supply :*** *Single-phase* ***230 V*** *(a.c.)*
  - *Frequency : 50 - 60 Hz*
  - *Supply voltage tolerance : - 10 % / + 15*
  - *Connection terminal : Terminals 1 - 2 (Power supply)*
  - *Burden : 5 VA*
- ❑ ***SDC Model : 0.24.... 120 V c.c. (continua)***
  - *Supply voltage tolerance : - 20 % / + 15*
  - *Connection terminal : Terminals 1 - 2 (Power supply)*
  - *Burden :* 2,2 W
- ❑ *On request: other voltages*

b.-Maximum voltage at the voltage measuring circuit:

- ❑ **Standard : 300 V a.c. phase-to-neutral / 520 V a.c. phase-to-phase 45 to 65 Hz**
- ❑ *On request:*
  500 V a.c. phase-to-neutral / 866 V a.c. phase-to-phase
  110 V a.c. phase-to-neutral / 190 V a.c. phase-to-phase

c.- Maximum allowable current : Current Transformer of In / 5 A a.c.

d.- Operation conditions :

- Operation temperature range: -10 to +50 ºC
- Humidity : 5 to 95 % R.H. non-condensing

e.- Safety : Designed to meet protection class III- 300 V a.c. as (EN 61010).

Mounting: ⚠

Instrument is to be mounted on panel (cut-out $92^{+0.8}$ x $92^{+0.8}$ *mm*, as per DIN 43 700). All connections keep inside the cabinet.

Note that with the instrument powered on, the terminals could be dangerous to touching and cover opening actions or elements removal may allow accessing dangerous parts. Therefore, the instrument must not be used until this is completely installed.

The instrument must be connected to a power supply circuit protected with gl type (IEC 269) or M type fuses rated between 0.5 and 2 A. This circuit should be provided with a circuit breaker or any equivalent element to connect (ON) or disconnect (OFF) the instrument from the power supply network. The supply and measuring voltage circuits will be both connected through a wire with a minimum cross-section of 1 mm^2.

The line of the current transformer secondary will have a minimum cross-section of 2,5 mm^2.

3.2.- CVM-96 (RS-485) Connection terninal (see lable on the rear part)

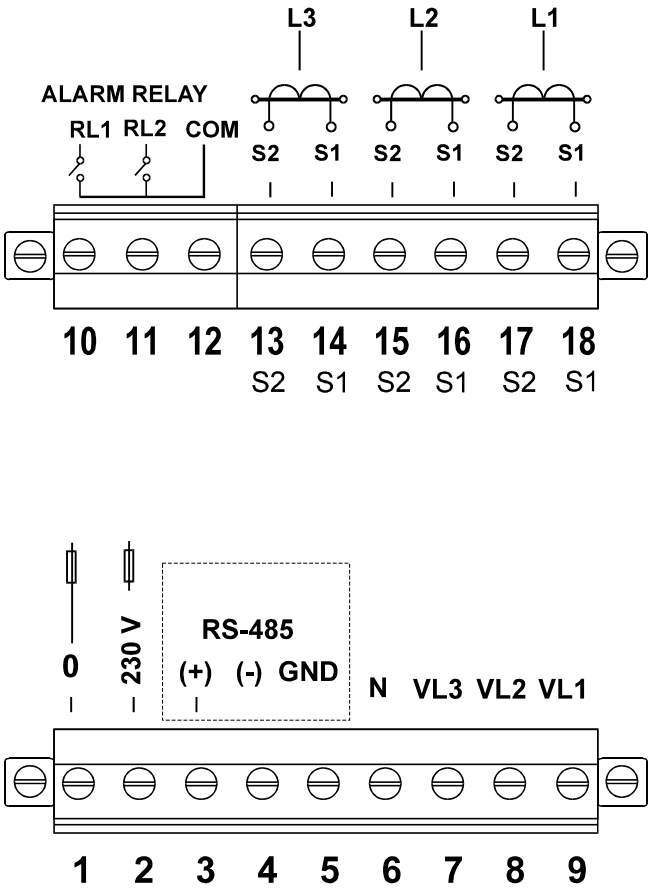

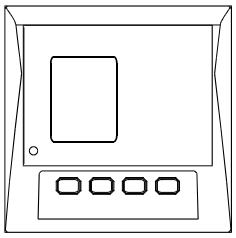

No.	***Terminal description***
	Upper connection terminal
10	*Relay RL1 output*
11	*Relay RL2 output*
12	*Relay common*
13	*Current AL3 - S2 input*
14	*Current AL3 - S1 input*
15	*Current AL2 - S2 input*
16	*Current AL2 - S1 input*
17	*Current AL1 - S2 input*
18	*Current AL1 - S2 input*
	Lower connection terminal
1	**Supply voltage input: 0 V*
2	**Supply voltage input:230 Va.c.*
3	*RS-485 (+)*
4	*RS-485 (-)*
5	*RS-485 (GND)*
6	*Neutral measurement*
7	*VL3 measurement*
8	*VL2 measurement*
9	*VL1 measurement*
	*Lower connection terminal (SDC Model)
1	*Supply voltage (+) d.c.*
2	*Supply voltage (-) d.c.*

NOTE: Terminals 13, 15, 17 are internally connected to the 6 terminal (Neutral)
... / 5 A current inputs are isolated for the ITF model.

3.3.- CVM-96 (RS-232) Connection terninal (see lable on the rear part)

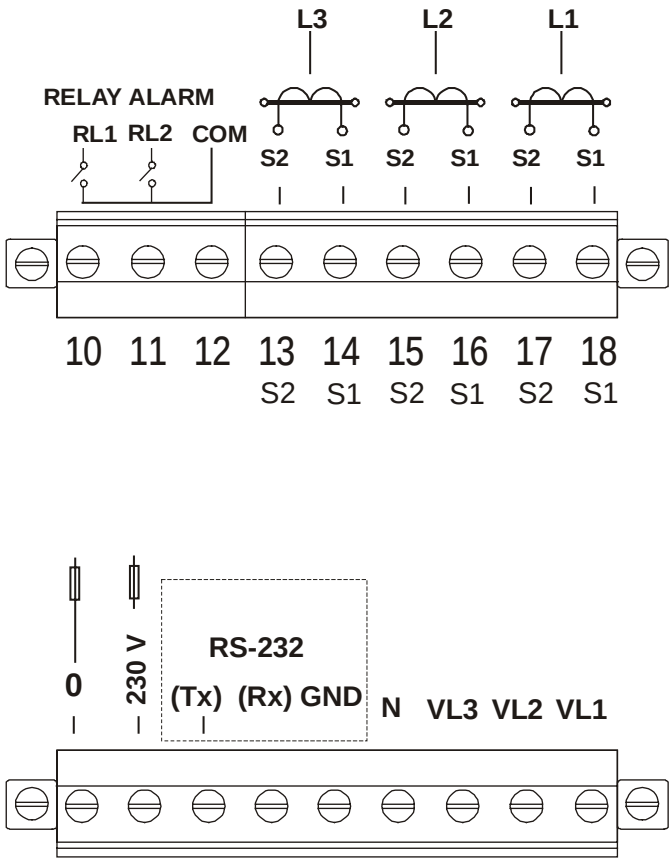

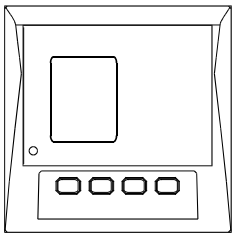

No.	***Terminal description***
	Upper connection terminal
10	*Relay RL1 output*
11	*Relay RL2 output*
12	*Relay common*
13	*Current AL3 - S2 input*
14	*Current AL3 - S1 input*
15	*Current AL2 - S2 input*
16	*Current AL2 - S1 input*
17	*Current AL1 - S2 input*
18	*Current AL1 - S1 input*
	Lower connection terminal
1	**Supply voltage input: 0 V*
2	**Supply voltage input:230 Va.c.*
3	*RS-232 (Tx)*
4	*RS-232 (Rx)*
5	*RS-232 (GND)*
6	*Neutral measurement*
7	*VL3 measurement*
8	*VL2 measurement*
9	*VL1 measurement*
	*Lower connection terminal (SDC Model)
1	*Supply voltage (+) d.c.*
2	*Supply voltage (-) d.c.*

NOTE: Terminals 13, 15, 17 are internally connected to the 6 terminal (Neutral)
... / 5 A current inputs are isolated for the ITF model.

3.4.- Connection drawing for the CVM-96 :

a.- Three-phase network.- 4 wires (low voltage) :

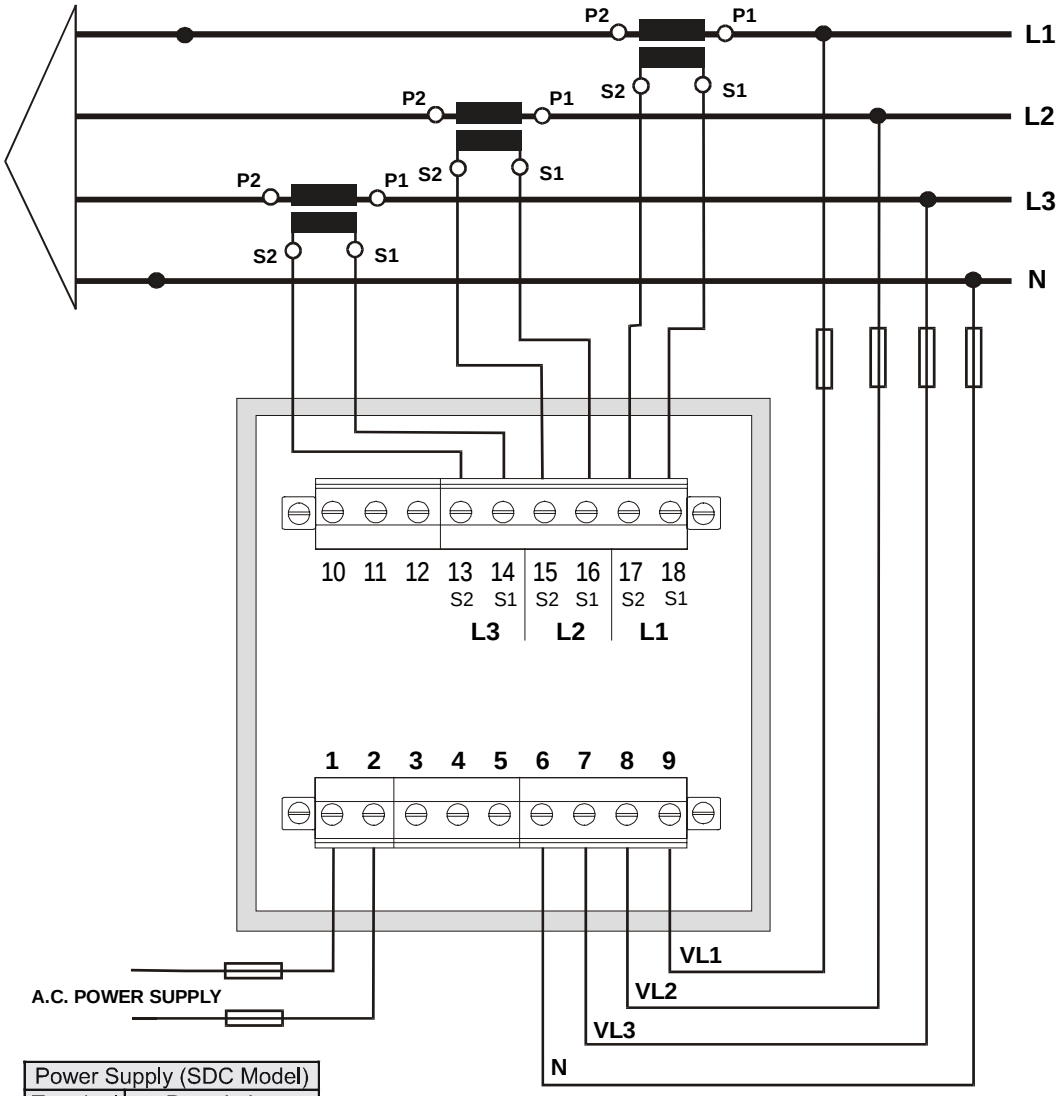

Power Supply (SDC Model)	
Terminal	Description
1	+ d.c.
2	- d.c.

b.-Three-phase network – 3 wires (low voltage):

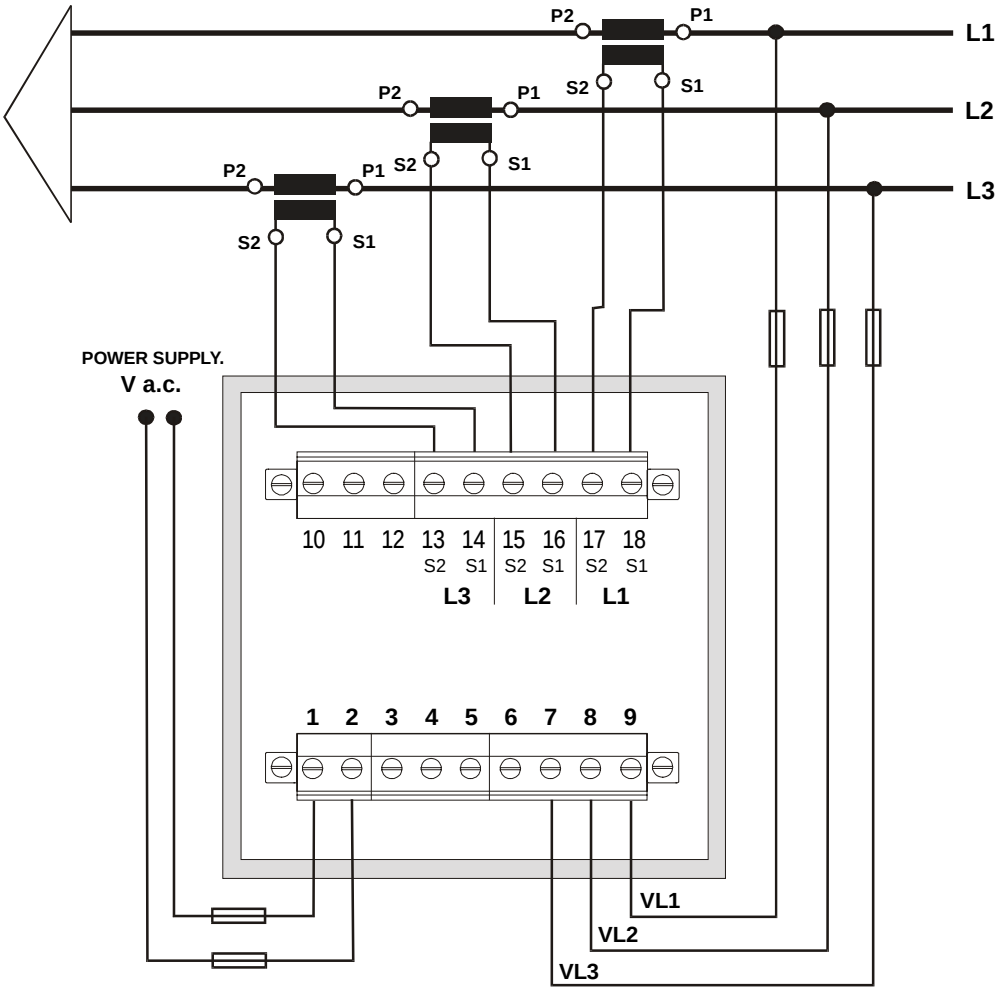

Power Supply (SDC Model)	
Terminal	Description
1	+ d.c.
2	- d.c.

c.- Three-phase network - 3 wires (2 P.T. and 3 C.T.):

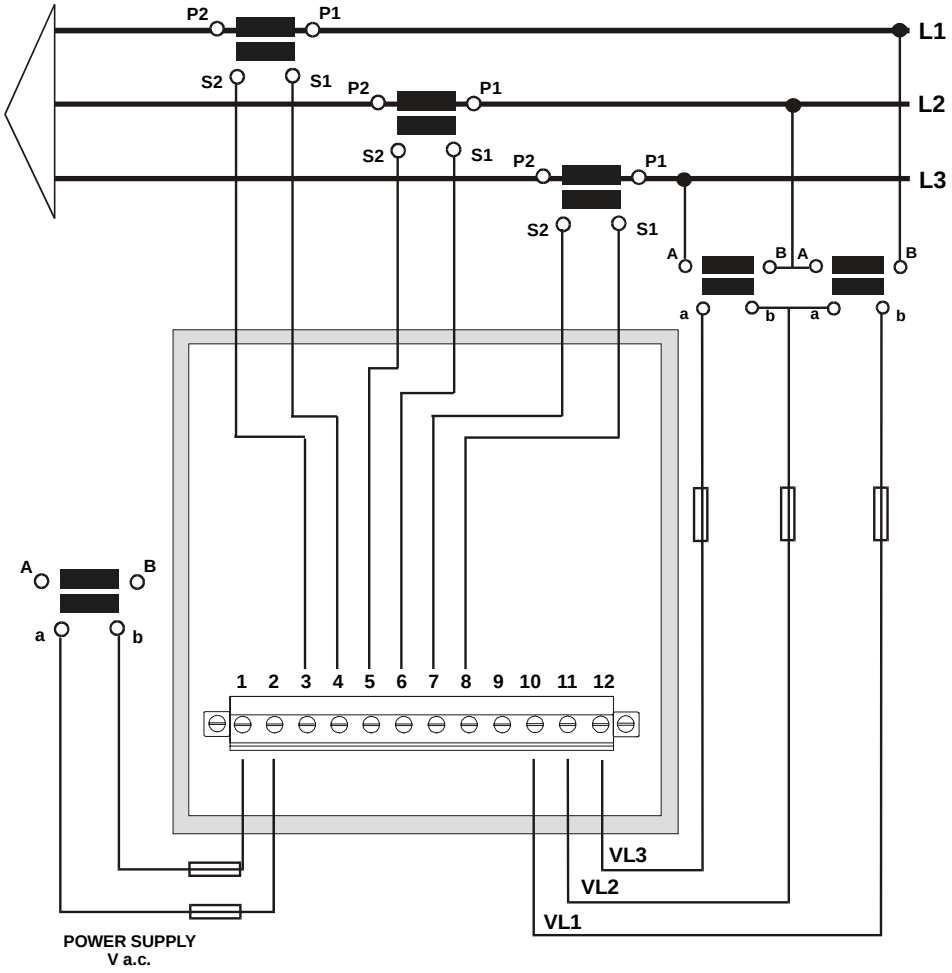

Power Supply (SDC Model)	
Terminal	Description
1	+ d.c.
2	- d.c.

d.- Three-phase network - 3 wires (2 P.T. and 2 C.T.):

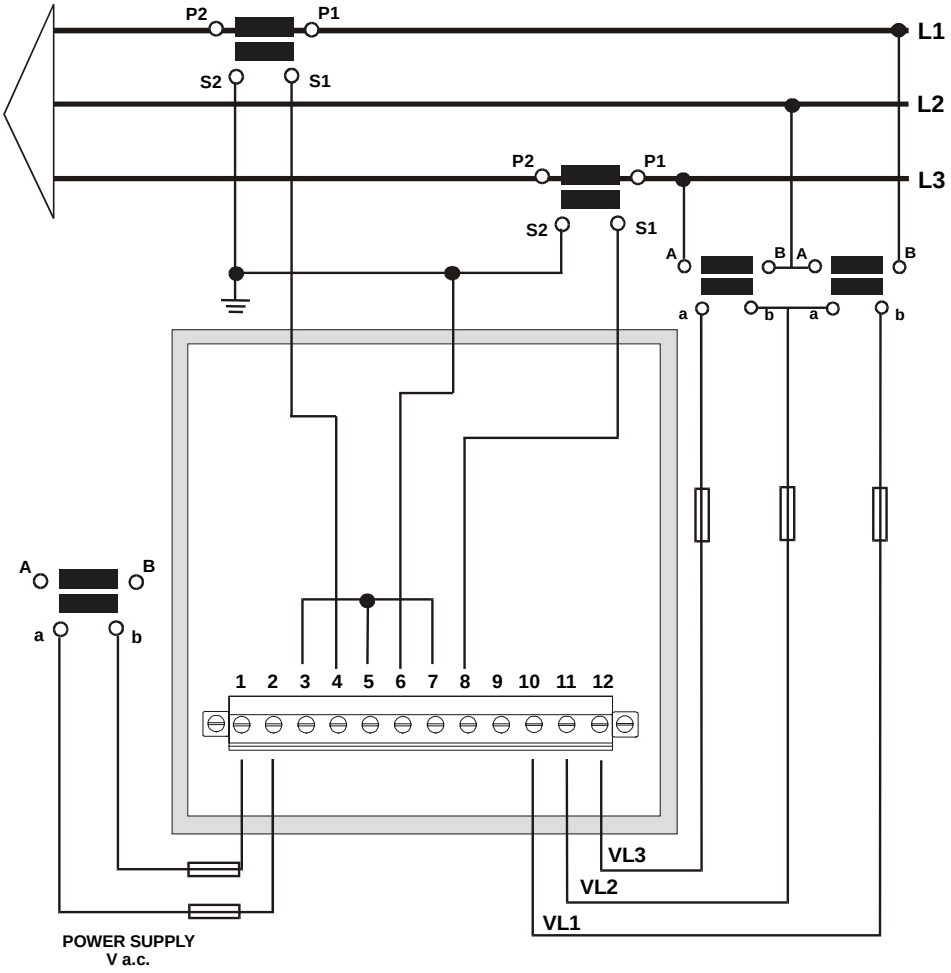

Power Supply (SDC Model)	
Terminal	Description
1	+ d.c.
2	- d.c.

IMPORTANT REMARK! If <u>power = -0.01</u> is shown for any of the phases and voltage and current are not zero for this phase, check out following points:

- Assure that L1, L2 and L3 phases coincide in voltage and current.
- Correct polarity? Reverse the current transformer placed at this phase.

4.- OPERATION MODE

The instrument has three displays. Each one has also a LED type indicators (red colour). Every led will be on according to the parameter presently shown in screen.

When the CVM-96 is powered up, the display shows " **xxxx** ", so informing about the program version and the SETUP. After some seconds, the analyzer is ready for operation and shows one of the available screens. A led next to the shown parameter is on.

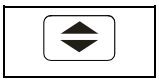

Parameters on display can be switch by pressing the key . Leds on the right or left indicate the parameters shown on screen at any moment.

When the first led (red) is on, it means that VOLTAGE values are shown on screen, that is, the user can read the voltage of the phase L1 (V1), voltage of the phase L2 (V2) and voltage of the phase L3 (V3).

Whether the key " " is press, the next led will be on, so indicating that for this screen CURRENT values of each phase are now shown.

Pressing again the key " " , the next led will be on, and the screen will shown following three parameters, and so successively.

Max **min**

Pressing the "**max**" or "**min**" key, maximum or minimum values for the parameters being shown by display, respectively, appear in screen.

This function is only valid while you keep pressing the "**max**" or "**min**" key. If you stop pressing the key the instantaneous values will appear again after 5 seconds.

While showing maximum or minimum values the LED indicators will keep blinking.

Reset

Pressing the "**reset**" key the system is reset. This is equivalent to switch off the power supply of the instrument. The maximum and minimum values recorded will be automatically deleted from the internal memory.

If you are in the SETUP process and press the "**reset**" key, you exit it without saving any modification that you might have done (this event will depend on the SETUP section that is accessed when the reset action is carried out) and reset of the system occurs.

5.- SETUP PROCEDURE

The SETUP procedure of the CVM-96 is performed by means of several SETUP options.

> ☞ For accessing the **SETUP menu** the keys **max** & **min** must be simultaneously pressed once the instrument is at the main screen.

When accessing the **SETUP,** the message "**SETUP unloc** " (1) is shown for some seconds on screen, or, otherwise, the message "**SETUP loc"** (2).

*(1) **SETUP UNLOC** (SETUP unlocked) : when the SETUP is accessed, configuration parameters can be either visualized and modified.*
*(2) **SETUP LOC** (SETUP locked) : when the SETUP is accessed, configuration parameters can be visualized but cannot be modified .*

Once into the SETUP, use the keyboard to select different options and enter required variables:

- The key validates de value and pass to the next menu.
- The key **MAX** permits to select among different options in a menu, or to increase a digit when a variable is being entered.
- The key **MIN** permits to move the cursor along the digits.

Different options are following shown in a sequential mode:

1. Choice of visualization of phase-to-neutral or phase-to-phase voltages
2. Voltage display mode
3. Voltage transformation ratio.
4. Value of the current transformer primary : 1 a 10000 A
5. Power demand meter setting
6. Choice of default initial screen
7. Time for display shutdown
8. Deleting energy counters
9. Choice of harmonic distortion determination mode: d% or THD%
10. Setting alarms : RELAY 1 (OUT 1) & RELAY 2 (OUT 2)

5.1.- Phase-to-Phase or Phase-to-Neutral voltages

After the word "**set**" you will see on the three displays the voltages of the phases L1, L2, L3.

U1 U2 U3	or	U12 U23 U31

Phase to Neutral Voltages: U1, U2, U3
Phase to Phase Voltages : U12, U23, U31

a.- To select one of the voltage options just press the green key "**max**" and both options will appear alternately.

b.- When you get in the display the desired option just press the "⬍" key to validate it and access to the next SETUP option.

5.2.- Voltage display mode

This option permits the user to select the voltage display mode. That way, the choice between viewing the voltage with one decimal digit or without decimals is user-programmable.

SEt Udec no	ó	SEt Udec YES
No decimals		1 decimal digit

a) To select one of the voltage options just press the green key "**max**" and both options will appear alternately.

When you get in the display the desired option just press the "⬍" key to validate it and access to the next SETUP option.

5.3.- Voltage transformation ratio

5.3.1.- Voltage Transformer Primary

On the screen we read the word "SET U P" followed by 5 digits. They allow us setting the primary of the voltage transformer.

SET U
P - -
- - -

Last digit of the first display indicates "U" (Voltage) and first digit of the second display indicates "P" (Primary). It means that we can set the primary of the voltage transformer. To avoid mistakes the Voltage red LEDs remain lit on.

a) To write or modify the value just repeatedly press the "**max**" key and the blinking digit value will be increased.

b) When the value on screen is the proper one, we can pass to the next digit by pressing the "**min**" key in order to modify the other values.

c) When the blinking digit is the last one, pressing the "**min**" key we go back to the initial value: set values can be again modified.

d) Press"[◆] " to pass to the next SETUP option.

Note: Maximum values of transformation ratios which are allowable to be set, depend on the full-scale value of the measuring instrument. **(see indications on the rear side lable**).

FULL-SCALE VALUE	MAXIMUM ALLOWABLE VALUE
110 V~	99,999
300 V~	70,000
500 V~	40,000

- In case that a value higher than the maximum allowable value is validated "[◆] ", the screen will blink and the previous set value will be kept in memory.

5.3.2.- Voltage Transformer Secondary

We can now set the value of the secondary of the voltage transformer. Only three digits are available:

SET U
S
- - -

Same process than in point 5.3.1:

- "**max**" key: Allows us modifying the value of the blinking digit. Each time it is pressed the value is increased.
- "**min**" key: Allows us the validation of the blinking digit and going to the next one.
- Press "⇕" to pass to the next SETUP option.

If the CVM96 is directly connected to the mains (without voltage transformer) the values of primary and secondary must be the same, for instance 00001/001.

5.4.- Current Transformer Primary

"SET A P" and five digits appear on screen allowing us to set the primary of the current transformer.

SET A
P - -
- - -

The procedure is the same one done at the previous sections with the "**max**", "**min**" and "⇕" keys.

- When the last digit blinks, pressing then "**min**" the first digit is again accessed, so that set value can be modified if required.
- The secondary of the current transformers is not programmable. It is automatically set at 5 A (... / 5 A ac)

NOTES:

- The secondary of the current transformers is not programmable. It is automatically set at 5 A (... / 5 A ac)
- The primary current value to be set is also limited by the following condition: The maximum allowable primary current value which can be set is defined by the fact that the multiplication of the primary voltage value by this primary current value cannot exceed 20,000,000.

5.5.- Setting power demand utility screens.

Push the key "⬍" and the following screens will appear by display:

1.- PARAMETER TO CONTROL ("Pd Code xx")

None		**00**
Three phase active power	kW III	**16**
Three phase apparent power	kVA III	**34**
Average three-phase current	AIII	**36**
Current per phase	A1 – A2 – A3	**A-PH**

Value of power integrated during the programmed demand period.

2.- DEMAND PERIOD (**1 to 60 min**.) ("Pd Per xx")

3.- CLEAR MAXIMUM VALUE IN MEMORY
("CLr Pd xx") **no** or **YES**

Programming mode:

- "**max**" key: allows choosing the different available options.
- "**min**" key: allows the validation of the blinking digit and go forward to the next digit (only for the "Pd Per xx" option).
- To pass to the next option press "⬍".

If you don't want to modify anything, just press the "⬍" key three times without modifying any value.

5.6.- Initial screen setting

This option allows choice among **fixed or rotary screen:**

a.- **Fixed screen** (choice is switch just pressing): choice among 10 available screen of the initial screen to be shown when the CVM-96 is powered (or when the CVM-96 is reset).

b.- **Rotary screens**: all 10 screens are successively shown at intervals of 5 s.

This option is noticed by means of some leds:

SET
dEF
PAGE

- The key "**max**": permits to modify the selected page. The led of the selected option will be on. Whether rotary screens option is selected, then all leds will be on.

- Press "" to validate the choice.

5.7.- Setting of the display shutdown time

Setting of the period of time to go by, from the moment that the CVM keyboard is not touched anymore, before the CVM display is automatically shut down (low consumption mode):

dISP
OFF
05

Time to shutdown (Minutes)

When the display is shut down, a Led at the bottom left corner of the CVM will keep blinking. The display will be automatically turned on when any CVM key is pressed.

- "**max**" key: to modify the value of the blinking value.
- "**min**" key: to validate the blinking value and go to the next digit.

5.8.- Clearing energy counters

On display we see "CLR ENER no" (Clear energy counters).

- **"max"**: To select "YES" or "no"
- "⬍": To validate the choice and pass to the following SETUP option.

Display: If any of the energies is programmed (kWh, kvarhL or kvarhC), it is displayed as follows:

⬍	kWh
max	MWh
min	Wh

Example : If the accumulated energy is 32.534,810 kWh, it will be displayed as follows:

3 2			MWh
	2 5 3 4		kWh
		8 1 0	Wh

⬍	2534 kWh
max	32 MWh
min	810 Wh

Note : the energy counter range is limited at **999.999.999 Wh** , that is**,** when the value of **1 GWh** is reached, the counter is reset to zero.

5.9.- THD or D setting

SET DHAR **d**	or	SET dHAR **Thd**

Two modes for the harmonic distortion calculation can be selected:

- **d %** : total value of the harmonic distortion referred to the fundamental value.
- **Thd %** : total value of the harmonic distortion referred to the R.M.S. value.

The selected option will be the one shown on screen.

a.- To select any option just press "**max**" to switch between the two available options.

b.- Press "⇕" to validate the choice. Since all SETUP options have been completed, the SETUP is exited, all modifications are saved in memory, and the running mode automatically starts up.

5.10.- Additional screens when RELAY OUTPUTS (2 relays) are equipped

With these outputs the CVM-96...C2 can be set to deliver:

A.- **Pulse every certain kWh or kvarh (ENERGY).** You can define the value corresponding to the energy consumed for generating a pulse (0.5 s long): kWh / 1 pulse or kvarh / 1 pulse

B.- **ALARM conditions**: the parameter to be controlled, the maximum value, the minimum value and the delay are user-definable for each relay output.

On the CVM-96 screen following messages appear at this SETUP option:

OUT 1	RELAY 1
CODE	
00	☞ Parameter No. (1)

☞ *Depending on the selected variable we will pass to a.- or b.- sections*

☑ In case that no parameter is wanted to be programmed set *par. No. = 00*.

Parameter	Symbol phase L1	Code	Symbol phase L2	Code	Symbol phase L3	Code
Single voltage	V 1	01	V 2	06	V 3	11
Current	A 1	02	A 2	07	A 3	12
Active power	kW 1	03	kW 2	08	kW 3	13
Reactive power Inductive/ Capacitive	kvarL 1 kvarC 1	04	kvarL 2 kvarC 2	09	kvarL 3 kvarC 3	14
Power factor	PF 1	05	PF 2	10	PF 3	15
% THD V	THD V1	25	THD V2	26	THD V3	27
% THD A	THD A1	28	THD A2	29	THD A3	30

Three-phase active power	kW III	16	Three-phase cos	Cos	19
Three-phase inductive power	kvarL III	17	Three-phase power factor	PF III	20
Three-phase capacitive power	kvarC III	18	Frequency	Hz	21
Active energy	kWh	31	Ph-Ph voltage L1- L2	V 12	22
Reactive energy (inductive)	kvarh. L	32	Ph-Ph voltage L2 - L3	V 23	23
Reactive energy (capacitive)	kvarh. C	33	Ph-Ph voltage L3 - L1	V 31	24
Three phase apparent power	kVA III	34			
Power demand	Pd	35	Power demand (L1)	Pd	35*
Three-phase current	AIII	36	Power demand (L2)	Pd	42*
Neutral current	I_N	37	Power demand (L3)	Pd	43*

There are, besides, some parameters that refer to 3 phases at once. In case that any of these parameter is selected, then the alarm will be activated always one phase complies with alarm settings.

Parameter	**Symbol**	**Code**
Line-to-neutral voltages	V1 or V2 or V3	90
Currents	I1 or I2 or I3	91
Active powers	kW1 or kW2 or kW3	92
Reactive powers	kvar1 or kvar2 or kvar3	93
Power factors	PF1 or PF2 or PF3	94
Line-to-line voltages	V12 or V23 or V31	95
% THD V	THDV1 or THDV2 or THDV3	96
% THD I	THDI1 or THDI2 or THDI3	97

a.- If an ENERGY parameter is chosen: kW.h (31), kvarh.L (32) or kvarh.C(33)

OUT 1		RELAY 1
PULS		
xxxx	☜	kW / pulse (1)

(1) Value of energy in kW : four digits with floating decimal point

- <u>SETUP procedure:</u>

- "**max**" key: to modify the value of the blinking value.
  Every time it is pressed the value is increased.

- "**min**" key: to validate the blinking value and go to the next digit.

NOTE : When the last digit is reached, the position of the decimal can be move point with the "**max**" key.

Example for setting a 500 W / 1 pulse:

*Firstly we enter the value, 0500, and following we place the decimal point at the right position with the "**max**" key ➔ 0.500 kW.*

- For accessing to the next option, press "⬍": SETUP options for the second relay will appear (only with CVM-96...-C2).

OUT 2	RELAY 2
CODE	
00	☜ Parameter value (2)

Act as before. Pressing again "⬍" the SETUP mode is exited.

b.- ALARM conditions (1 condition for each relay): If any other parameter (1 to 30) is selected at (1), two outputs can be configured as alarms. For each output it is possible to set:

①	Any of the parameters measured by the CVM-96
②	MAXIMUM value
③	MINIMUM value
④	Delay for the conditions

These screens are successively displayed by the CVM-96 once the parameter has been selected (for the SETUP of each option proceed as in the Section a.-):

b.1.- Programming the maximum value to be controlled:

OUT 1	RELAY 1
AL hI	
0.000	☜ Maximum value

The key "**max**" will increase the value of the blinking digit (0,1...9, sign --). Use the key "**min**" to pass to the following digit.

b.2.- Programming the minimum value to be controlled:

OUT 1	RELAY 1
AL LO	
0.000 ☜	Minimum value

b.3.- Programming the delay:

OUT 1	RELAY 1
SEC	Delay in seconds
0.000 ☜	maximum 9999 s

THD parameters can also be selected as alarm conditions.

- Press "⬍" to pass to the next option: the SETUP for the second relay is then shown:

OUT 2	RELAY 2
CODE	
00 ☜	Parameter No. (1)

Proceed as before. Pressing again "⬍" the SETUP option exited.

☑ **ALARM ACTIVATION:** Alarms operation depend on the set values of MAXIMUM and MINIMUM.

MIN +	**MAX +** **max > min**	**ON OFF ON** ====== **0 Min Max**
MIN +	**MAX +** **max < min**	**OFF ON OFF** **==== ====** ====== **0 Max Min**
MIN --	**MAX +**	**ON OFF ON** **==== ===** **Min 0 Max**
MIN +	**MAX --**	**OFF ON OFF** ======= ====== **Max 0 Min**
MIN --	**MAX --** **max > min**	**ON OFF ON** ===== **Min Max 0**
MIN --	**MAX --** **max < min**	**OFF ON OFF** ===== ===== **======** **Max Min 0**

ON = alarm activated ----------> relay closed
OFF = alarm deactivated ------> relay open

☑ The **DELAY** set value is applied either to the connection or the disconnection when the alarm conditions occur.

☑ User-definable units for the different parameters are:

Parameter	Format	Example
Voltage	With decimals = V (xxxx) Without decimals = kV (xxx.x)	125.0 = 125 kV 0220 = 220 V 25.30 = 25.30 kV
Current	A	0150 = 150 A
Powers	kW, kvarL, kvarC	0.540 = 540 W 250.5 = 250.5 kW
Energies	kWh, kvarLh, kvarCh	
Power factor	+/- x.xx	- 0.70
Frequency	xx.x	50.0 = 50 Hz

<u>Output relay connection lay-out</u> ***CVM-96...-C2*** (2 relays) :

Out1	Terminals	Signal
RELAY 1	10 - 12	N.O.

Out2	Terminals	Signal
RELAY 2	11- 12	N.O.

6.- SPECIFICATIONS

Power supply : see specifications on the rear part of the CVM-96

- **CVM-96** : Single-phase 230 V a.c.
  Voltage tolerance: +10 % / -15 %
  Frequency: 50 ... 60 Hz
  Burden ..... 5 VA

- **CVM-96.... SDC** : Direct current 24 V ..... 120 V d.c.
  Voltage tolerence: -20 % / +15 %
  Burden ..... 2.2 W

Operation temperature ..... -10 to 50 ºC
Humidity ……. 5 to 95 % R.H. non-condensing

Measuring Circuits :

Rated voltage .... 300 V a.c. Phase-to-Neutral / 520 V a.c. Phase-to-Phase
Frequency ..... 45 to 65 Hz
Rated current ..... In / 5 A **(isolated inputs)**
Permanent overload .....1.2 In
Current input burden .....0.75 VA

Accuracy :

Voltage ..... 0.5 % of readout 2 digits
Current ..... 0.5 % of readout 2 digits
Powers ..... 1.0 % of readout 2 digits
Energy ……. 1.0 % of readout 2 digits

Test conditions :
- Errors due to C.T. are not included and direct voltage measurement
- Temperature between + 5 ºC and + 45 ºC
- Power factor between 0.5 and 1
- Measured values between 5 % ... 100 %

Mechanical Characteristics :

- Connection : pluggable connection terminal
- Case material Self-extinguishable, V0 plastic
- Protection Assembled unit (frontal) : IP 54
  Un-assembled unit (side and rear covers) : IP 31
- Dimensions 96 x 96 mm - depth: 100 mm
- Weight 0.520 kg

Relays characteristics: according to model

- Maximum switching load : 2500 VA
- Maximum switching voltage : 400 V a.c.
- Maximum switching current : 10 A

- Mechanical endurance : 3×10^7 operations
- Energy / alarms pulses : max. 1 pulse / s

At full load: (250 V a.c. / 10 A)

- Electrical endurance : 1×10^5 operations
- Maximum operation cadence : 450 oper. / hour

- Safety ..... Category III - 300 V a.c. / 520 a.c., as per EN-61010

- Protection against electric shock by class II double-isolation

Standards : IEC 664, VDE 0110, UL 94 , IEC 801 , IEC 348 , IEC 571-1
EN 50081-1, EN 50082-1 , EN-61010-1

Dimensions :

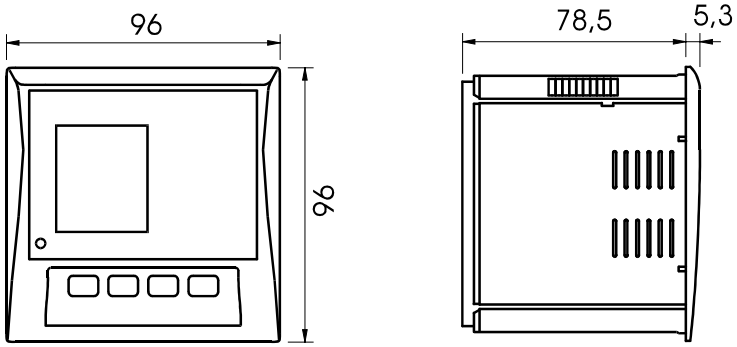

7.- SAFETY CONSIDERATIONS

All installation specification described at the previous chapters named INSTALLATION AND STARTUP, INSTALLATION MODES and SPECIFICATIONS.

Note that with the instrument powered on, the terminals could be dangerous to touching and cover opening actions or elements removal may allow accessing dangerous parts. This instrument is factory-shipped at proper operation condition.

8.- MAINTENANCE

The CVM-96 does not require any special maintenance. No adjustment, maintenance or repairing action should be done over the instrument open and powered and, should those actions are essential, high-qualified operators must perform them.

Before any adjustment, replacement, maintenance or repairing operation is carried out, the instrument must be disconnected from any power supply source.

When any protection failure is suspected to exist, the instrument must be immediately put our of service. The instrument’s design allow a quick replacement in case of any failure.

9.- TECHNICAL SERVICE

For any inquiry about the instrument performance or whether any failure happens, contact to National Meter's technical service.

National Meter Industries, Inc.
Bedford, NH 03110
P - 800.325.6674
D - 603.669.5790
email: tech@national-meter.com
www.national-meter.com

10.- CVM-96 COMMUNICATIONS

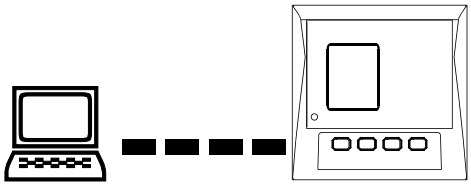

One or some CVM-96... can be connected to a P.C.. With this system we can get all the parameters in one central point of reading. The CVM-96..., has a serial RS-485 or RS-232 type output (according to the model). If we connect more than one device to the same communication line (RS-485), we have to assign to each of them a different code or direction (from 01 to 99), since the P.C. needs the identification of every measuring point.

10.1.- ! To take into account:

- PROTOCOL: MODBUS © (**Question / Answer)**

- CVM-96 DEFAULT CONFIGURATION : 001 / 9.600 / 8 bits / N / 1 bit

- Available baud rates: 1.200 - 2.400 - 4.800 - 9.600 - 19.200 bauds

- RS-485 type output:

-RS-485 connection will be carried out by means of a **twisted and screened cable,** with a minimum of 3 wires, with a maximum distance between the CVM-96 and the last peripheral of 1.200 m. The CVM-96 uses a RS-485 communication bus allowing up to **a maximum of 32 devices in parallel (Multi-point bus) per port used in the PC**.

- RS-232 type output:

-RS-232 connection will be carried out by means of a **twisted and screened cable,** with a minimum of 3 wires, with a maximum distance between the CVM-96 and the P.C. of 15 m.

10.2.- RS-485 TYPE CONNECTION TO A RS-232 TYPE INPUT OF A PC

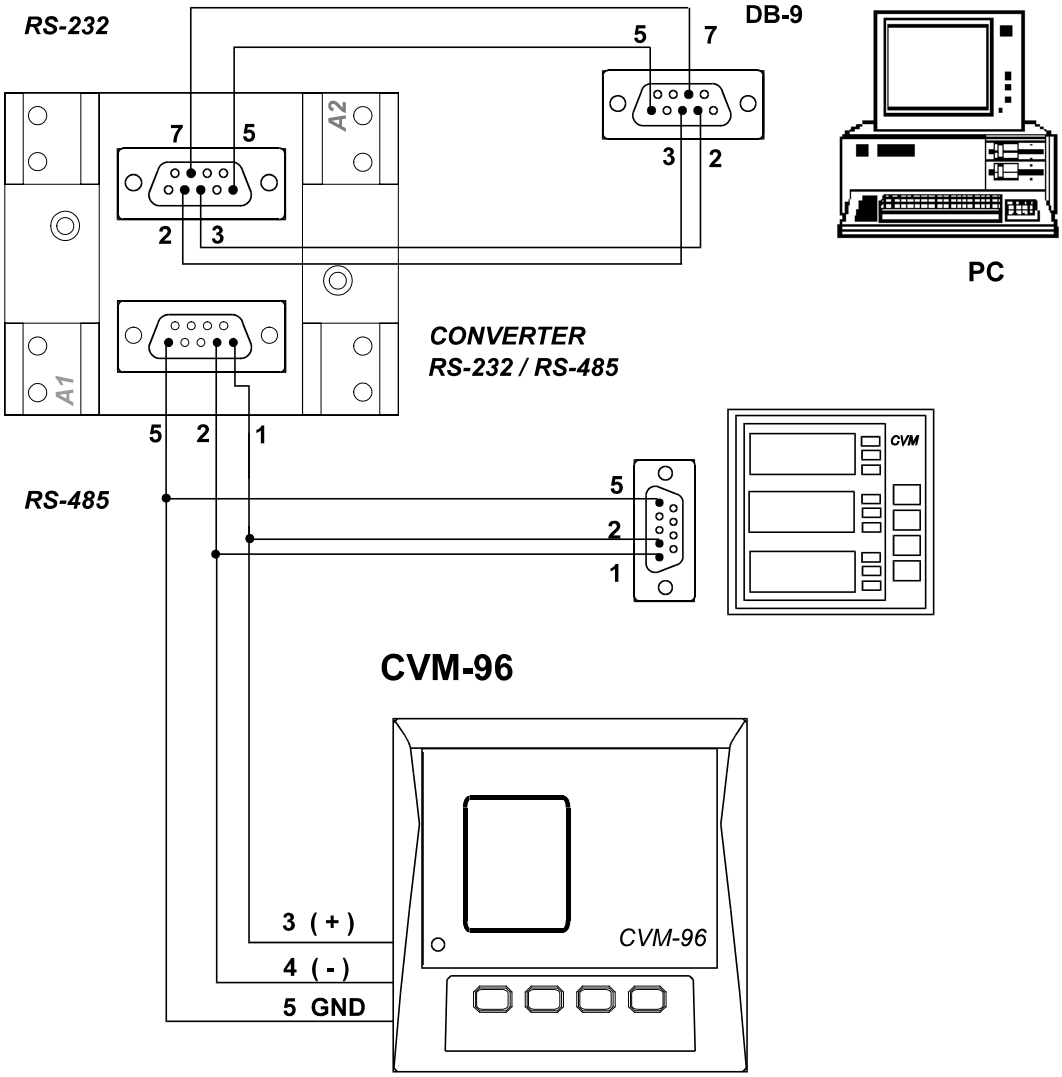

***If the conversor RS232/485 with RTS control (code 770208) is used, it is no necessary to connect the pin 7 on the RS232 side.**

10.3.- RS-232 TYPE CONNECTION TO A RS-232 TYPE INPUT OF A PC

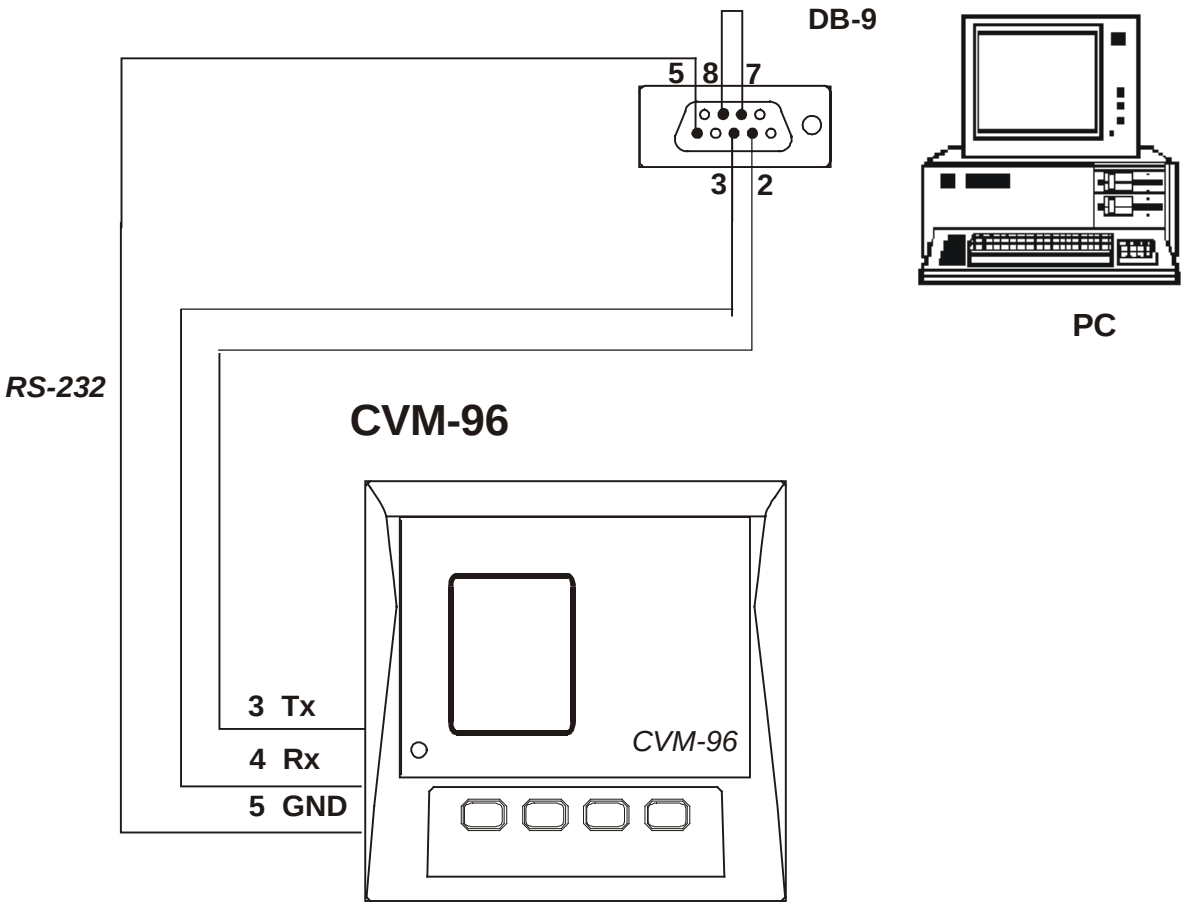

10.4.- MODBUS © protocol

The CVM-96 analyzer can communicate by means of the **MODBUS ©** protocol, as it is following described:

When the CVM-96 communicates with MODBUS protocol, it uses the **RTU mode** (Remote Terminal Unit). Each 8-bits byte in a message contains two 4-bits hexadecimal characters.

The format for each byte in RTU mode is :

* *Code*	:	**8-bits binary,** hexadecimal 0-9, A-F **Two hexadecimal characters** contained in each 8-bits field of the message.
* *Bits per Byte*	:	8 data bits
* *Error Check Field*	:	Cyclical Redundancy Check (**CRC) .**

MODBUS FUNCTIONS:

FUNCTION 01	Reading of relay state
FUNCTION 3 or 4	Reading of n Words (16 bits-2 bytes). This function permits to read all the electrical parameters of the CVM-96. Each parameters is a 32-bits long, hence two words are required to inquiry for a parameter. (4 bytes - XX XX XX XX).
FUNCTION 05	Writing one relay

a.- Registers assigned to different parameters measured by the ***CVM-96***:

PARAMETER	***Units***	*MODBUS* ***REGISTERS*** ***HEXA-DECIMAL*** *(longs)*		
		PRESENT Value	***MAXIMUM Value***	***MINIMUM Value***
Phase voltage - V 1	V x 10	00-01	60-61	C0-C1
Current - A 1	mA	02-03	62-63	C2-C3
Active power - kW1	W	04-05	64-65	C4-C5
Reactive power - kvar 1	var	06-07	66-67	C6-C7
Power factor - PF1	P.F. x 100	08-09	68-69	C8-C9
Phase voltage - V 2	V x 10	0A-0B	6A-6B	CA-CB
Current - A 2	mA	0C-0D	6C-6D	CC-CD
Active power - kW2	W	0E-0F	6E-6F	CE-CF
Reactive power - kvar 2	var	10-11	70-71	D0-D1
Power factor - PF2	P.F. x 100	12-13	72-73	D2-D3
Phase voltage - V 3	V x 10	14-15	74-75	D4-D5
Current - A 3	mA	16-17	76-77	D6-D7
Active power - kW3	W	18-19	78-79	D8-D9
Reactive power - kvar 3	var	1A-1B	7A-7B	DA-DB
Power factor - PF3	P.F. x 100	1C-1D	7C-7D	DC-DD
Three-phase active power – kWIII	W	1E-1F	7E-7F	DE-DF
Three-phase inductive power – kvarL III	var	20-21	80-81	E0-E1
Three-phase capacitive power – kvarC III	var	22-23	82-83	E2-E3
Cos III	Cos x 100	24-25	84-85	E4-E5
Three-phase power factor - PF III	P.F. x 100	26-27	86-87	E6-E7

PARAMETER	***Units***	*MODBUS* ***REGISTERS*** ***HEXA-DECIMAL*** *(longs)*		
		PRESENT Value	***MAXIMUM Value***	***MINIMUM Value***
Frequency (L1) - Hz	Hz x 10	28-29	88-89	E8-E9
Line voltage L1-L2 - V12	V x 10	2A-2B	8A-8B	EA-EB
Line voltage L2-L3 - V23	V x 10	2C-2D	8C-8D	EC-ED
Line voltage L3-L1 - V31	V x 10	2E-2F	8E-8F	EE-EF
%THD V 1	% x 10	30-31	90-91	F0-F1
%THD V 2	% x 10	32-33	92-93	F2-F3
%THD V 3	% x 10	34-35	94-95	F4-F5
%THD I 1	% x 10	36-37	96-97	F6-F7
%THD I 2	% x 10	38-39	98-99	F8-F9
%THD I 3	% x 10	3A-3B	9A-9B	FA-FB
Active energy – kWh	Wh	3C-3D		
Inductive reactive energy - kvarh L	varLh	3E-3F		
Capacitive reactive energy - kvarh C	varCh	40-41		
Three phase apparent power	kVA III	42-43	A2-A3	102-103
Power demand	Pd	44-45	A4-A5	
Corriente trifásica – AIII	mA	46-47	A6-A7	106-107
Neutral current	mA	48-49	A8-A9	108-109
Power demand (L1)*	Md (Pd)	44-45	A4-A5	
Power demand (L2)*	Md (Pd)	52-53	B2-B3	
Power demand (L3)*	Md (Pd)	54-55	B4-B5	

* This parameters are only enabled if the maximum demand by line current has been previously programmed

PARAMETER	Units	MODBUS REGISTERS HEXA-DECIMAL (longs)		
		L1	L2	L3
Fundamental	mA	1F4-1F5	212-213	230-231
Harmonic 2	%	1F6-1F7	214-215	232-233
Harmonic 3	%	1F8-1F9	216-217	234-235
Harmonic 4	%	1FA-1FB	218-219	236-237
Harmonic 5	%	1FC-1FD	21A-21B	238-239
Harmonic 6	%	1FE-1FF	21C-21D	23A-23B
Harmonic 7	%	200-201	21E-21F	23C-23D
Harmonic 8	%	202-203	220-221	23E-23F
Harmonic 9	%	204-205	222-223	240-241
Harmonic 10	%	206-207	224-225	242-243
Harmonic 11	%	208-209	226-227	244-245
Harmonic 12	%	20A-20B	228-229	246-247
Harmonic 13	%	20C-20D	22A-22B	248-249
Harmonic 14	%	20E-20F	22C-22D	24A-24B
Harmonic 15	%	210-211	22E-22F	24C-24D

NOTE: The maximum number of parameters (1 parameter = 1 word of 32 bits) that can be read in one transmission is 20.

EXAMPLE

INQUIRY	**0A 04 00 00 00 0A 71 76**
0A	CVM-96 peripheral number, 10 in decimal
04	Reading function
00 00	Initial address (first register)
00 0A	Number of registers to be read
7176	CRC character

ANSWER	**0A 04 14 00 00 08 4D 00 00 23 28 00 00 0F A0 00 00 00 90 00 00 00 60 CB 2E**
0A	CVM-96 number , 10 in decimal
04	Reading function – the one use for the inquiry
14	Bytes received (20)
00 00 08 4D	V 1x10 (register 00 Hex), in decimal 212.5 V
00 00 23 28	mA 1, in decimal 9000 mA
00 00 0F A0	W 1, in decimal 4000 W
00 00 00 90	varL 1, in decimal 144 varL
00 00 00 60	PF 1 x 100, in decimal 96 PF
CB 2E	CRC character

b.- Reading digital outputs (relays) - Function 01 :

Inquiry : PP**01**0000**0008**CRC (PP = peripheral No.)
Answer : PP**01**01**XX**CRC

Where XX (hexadecimal byte) → translated to binary

b7	b6	b5	b4	b3	b2	**b1**	**b0**

bit **b0** = relay 1 (1 = ON ; 0 = OFF)
bit **b1** = relay 2 (1 = ON ; 0 = OFF)

c.- Write of digital outputs

This function is used to force the status of the CVM-96 digital outputs.

Output No.	Message	Answer
Relay 1	PP050000xx00 CRC	PP050000xx00 CRC
Relay 2	PP050001xx00 CRC	PP050001xx00 CRC

Where: PP → peripheral No.
xx → 00 Deactivate
→ FF Activate

11.- APPENDIX A: Second SETUP of the CVM-96

A second SETUP menu is accessible in order to perform the configuration of the CVM-96 with other features different from factory-supplied ones.

To access this menu proceed as follows:

- Being the CVM-96 powered off, simultaneously press "⬍", "**max**" and "**min**" keys.
- Holding these keys pressed, powered the CVM-96 on.

Following messages will be then shown on display:

a.- COMMUNICATION PROTOCOL: MODBUS

SET	
PROT	Protocol:
BUS	☞ MODBUS (c) (BUS) protocol (*) See related section in this manual

- "⬍" key: to validate the choice and pass to the next SETUP screen:

b.- SETTING COMMUNICATION PARAMETERS

SET	
Cdef	Default configuration
NO	☞ "**max**" key to switch from NO / YES

- If YES is chosen: the configuration is **001 / 9600 / 8 bits / N / 1 bit**

- If NO is chosen, pressing "⇕" following options successively appear:

- n PER	:	Peripheral No. 001 to 255
- Baud 1	:	baud rate 1.200 – 2.400 – 4.800 – 9.600 – 19.200
- Parity	:	No, even, odd
- LEN	:	(length) 8 bits
- Stop bits	:	1 or 2

c.- SETUP LOCKING OR UNLOCKING

SET Up Unlo

☞ **Loc** (locked SETUP) or **Unloc** (unlocked SETUP)
Use the key "**max**" to modify the choice.

- Whether **LOC** is set, *when the SETUP is accessed, configuration parameters can be visualized but cannot be modified*.

- To modify the previously set option, a **4-figure password** is required to be entered (in case that this password is not correct, this blinks and the previous menu is again accessed).

PASSWORD : 1234

To exit this SETUP mode, the key RESET can be pressed at any moment (WARNING: whether the SETUP is exited by pressing the key RESET some last modification might not be saved in memory) or reach the end of this SETUP mode.